REV:	ECO:	DESCRIPTION:	DWN:	DATE:
A		PRODUCTION RELEASE	D.A.M.	4/26/04
B	#3571	REVISIONS REMOVED FROM BILL OF MATERIALS	T.A.P.	9/10/04
C	#3653	CHANGE TO BILL OF MATERIALS	T.A.P.	1/5/05
D	#4732	CHANGED 40736–601 TO 40736–701 ON BOM	RR	11/10/09
E	#5205	SEE ECO	DAS	2/29/12
F	6575	UPDATE TO CURRENT PRACTICES	DAS	6/28/17

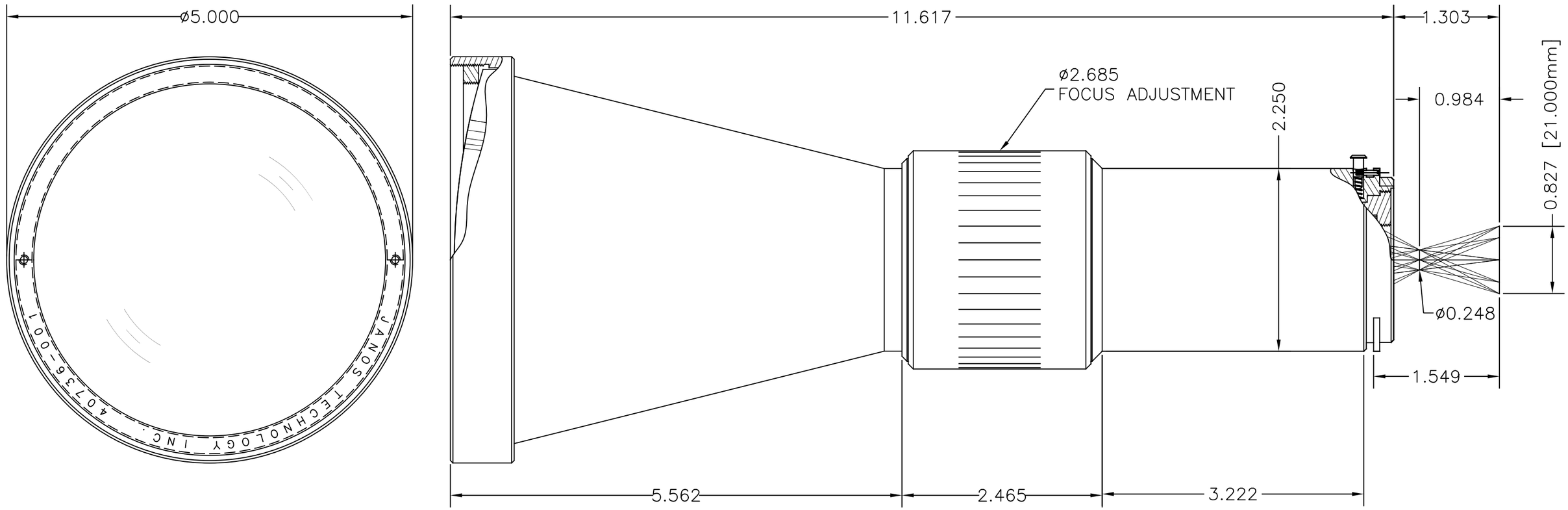

PROJECTION: THIRD ANGLE

PROPRIETARY:

THIS DOCUMENT CONTAINS INFORMATION WHICH IS PROPRIETARY AND IS THE PROPERTY OF JANOS TECHNOLOGY INC. AND MAY NOT BE USED, REPRODUCED, OR DISCLOSED IN ANY MANNER WITHOUT THE EXPRESSED WRITTEN PERMISSION OF JANOS TECHNOLOGY INC.

UNLESS OTHERWISE SPECIFIED DIMENSIONS ARE IN INCHES METRIC EQUIVALENT IN BRACKETS [MM]

ANG.	2 PL	3 PL	HOLES
±X/X°	±X.XXX	±X.XXX	±X.XXX

DRAWN:	T.A.P.	DATE:	7/23/01
CHECKED:	DAM	DATE:	7/19/17
ENG APPR:	TO	DATE:	12/20/17
MFG APPR:	JLT	DATE:	11/17/17
QA APPR:	JL	DATE:	8/18/17

JANOS TECHNOLOGY™
55 BLACK BROOK ROAD
KEENE, NH 03431 U.S.A.

TITLE: 350mm F/4 3–5μm

SIZE:	DRAWING NUMBER:	REVISION:
B	40736–AA1	F

SCALE: N.T.S. | CAGE: 66810 | SHEET: 1 OF 2